CSE 2600
Intro. To Digital Logic & Computer Design

Bill Siever
&
Michael Hall

Announcements

- Homework 1: Returned
  Can request “regrade” of problems for ~1 week on assignments
  Not accepted after that.

- Homework 3A Posted / Due Sunday at 11:59pm

- Bill’s Office Hours Today: None…

Chapters 1-2: Combinational Logic

- (Purely) combines current inputs to produce output
  - Doesn’t depend on past inputs
  - Can be represented with a simple table
  - One-way: Doesn’t have any feedback paths from output back to inputs

Big-Picture So Far…

- We can build reliable, complex machines that work in binary
  - Yay Transistors!
- We can represent almost any information via binary encodings
  - Integers: We can even easily do arithmetic operations (+, -, etc.)
  - Letters/characters, “real” numbers, etc.
    - E.g., “A” = 65, “B” = 66, etc.

Big-Picture So Far…

- Gates: We can represent some primitive binary "machines" via a symbolic notation. Structure shows the flow of information.

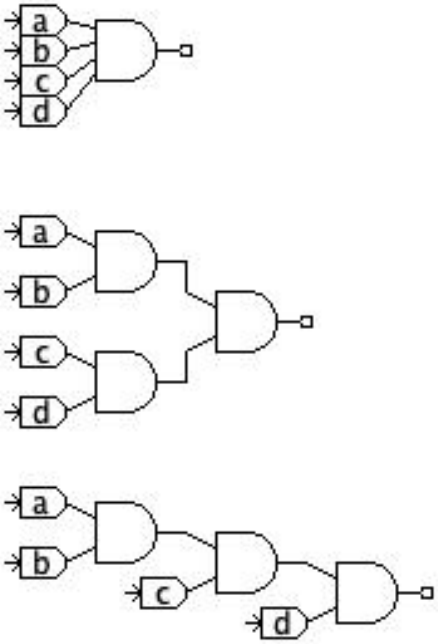

Aside: Propagation Delay

Gate	(ps)
NOT	6
2-input NOR	25
3-input NOR	35
2-input AND	25
3-input AND	36
4-input AND	42
2-input OR	25
3-input OR	44
4-input OR	48

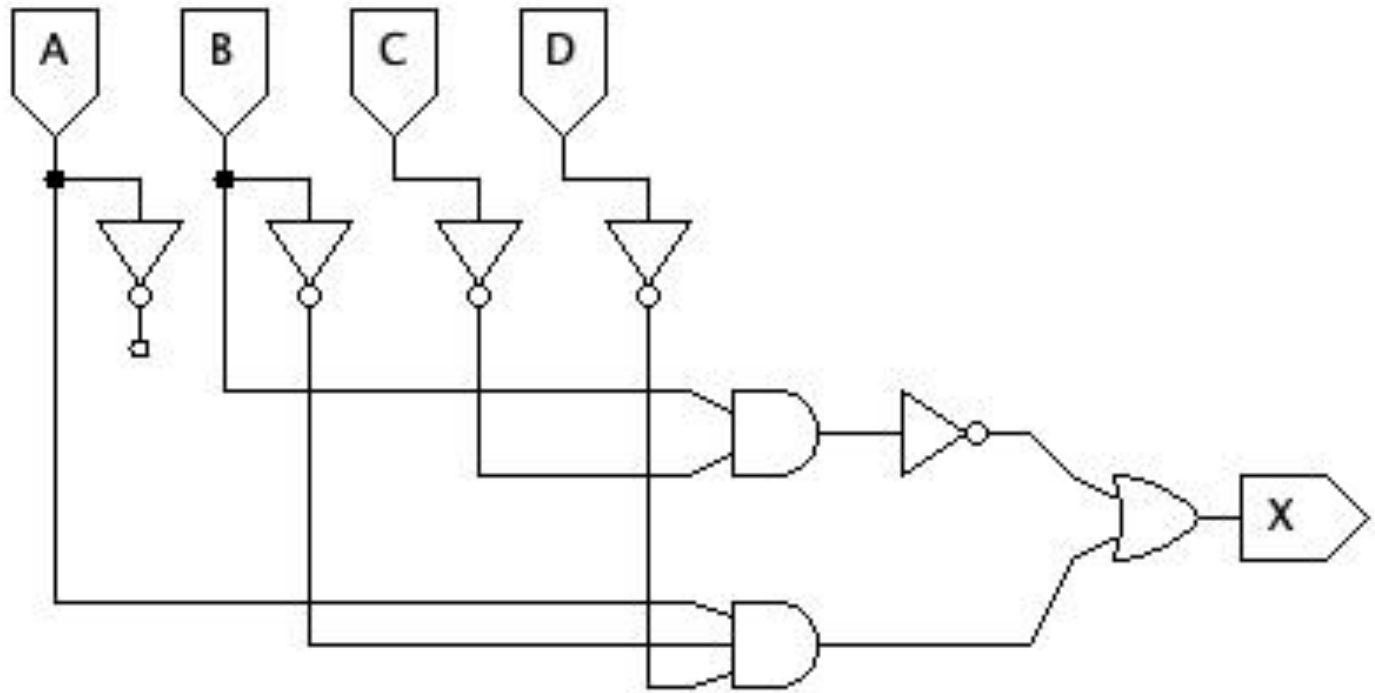

Big-Picture So Far…

- Almost any simple mapping (function) can be represented via a table
  - Show the “output” for all possible combinations of inputs

INPUTS (IN BINARY)	OUTPUTS (IN BINARY)
…	…

Big-Picture So Far…

- Any full table can be converted to a boolean logic equation

Inputs		Output
S	I	O
0	0	
0	1	
0	2	
0	3	
1	0	
1	1	
1	2	
1	3	

Big-Picture So Far…

- Any full table can be converted to a sum-of-products (SOP) boolean equation

Inputs			Output
S	I_1	I_0	O
0	0	0	0
0	0	1	0
0	1	0	1
0	1	1	1
1	0	0	0
1	0	1	0
1	1	0	1
1	1	1	0

$\bar{S} \cdot I_1 \cdot \bar{I_0}$

$\bar{S} \cdot I_1 \cdot I_0$

$S \cdot I_1 \cdot \bar{I_0}$

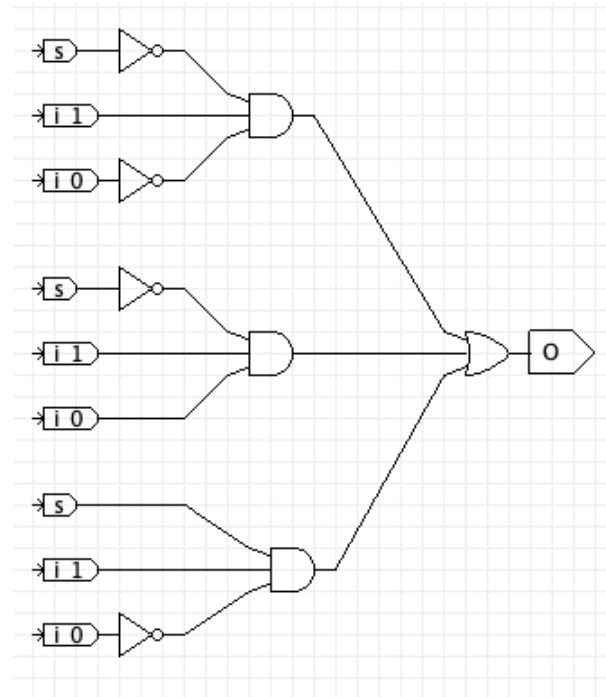

Big-Picture So Far…

- Any mapping/function that ***combines current inputs to produce the output*** *could* be described as a table
  - The table could be turned into equations
  - The equations could be made into machines
- Works on small problems, but table is too large for many problems
  - Ex: Add 2, 32-bit numbers:
    - Table with 64 columns of input
    - 18446744073709551616 rows in that table…

Studio 2B Recap

- Karnaugh Maps
  - Cells represent minterms
  - Combining cells is application of Theorem 10: $(B \cdot C) + (B \cdot \overline{C}) = B$
    - Only works if rows and columns are in Gray code order

Studio 2A: Example

- Small tables can be represented via K-Maps

Inputs			Output
S	I_1	I_0	O
0	0	0	0
0	0	1	0
0	1	0	1
0	1	1	1
1	0	0	0
1	0	1	0
1	1	0	1
1	1	1	0

	I			
S	**00**	**01**	**11**	**10**
0				
1				

Studio 2A: Example

- K-Maps represent SOP equations

	I			
S	00	01	11	10
0	0	0	1	1
1	0	0	0	1

Studio 2B Misc.

- Negation Notation
  - $\overline{AB}$ vs. $\overline{A} \cdot \overline{B}$
    - $\overline{A} \cdot \overline{B} = \overline{AB}$
- Glitches: ... a single input transition can cause **multiple** output transitions.
  - Often a result of different delays via different paths
  - Example
- Packages & Packages

Getting Loopy

- “Iterative” computations are common
  - Accumulation pattern (as pseudo-code):

```
sum = 0
for i=0..length(A)
   sum = sum + A[i]
```

  - Signal processing / filters
  - “Location” (state) tracking:
    where I am now = f(where I was in past, decisions)

Goal: Stable (Synchronized) Behavior

Another Goal: Store Data

Examples

- Investors Example 1: Inverters
- Bistable Example 2A: Inverters & some control
- Bitable Example 2B: Inverters, control, and …

Stable, Reinforcing Setup: SR Latch

- On-line Demo: https://logic.ly/
  - Bistable: Two stable configurations
- Goal: Met!
  - S=Set, R=Reset

SR Latch

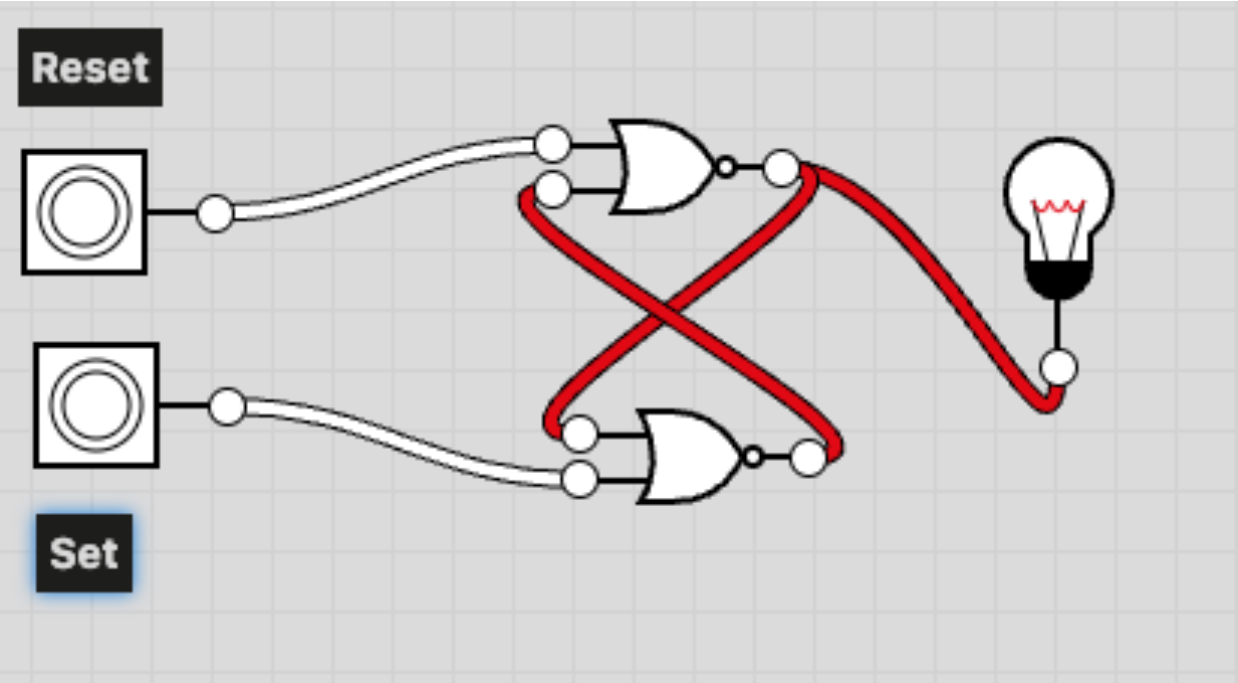

Story Time: Latches+

Goal: Store Data

- Set/Reset is *inconvenient*
  - We want something like, data=X, where x is 0 or 1 (store X, not “set or reset data based on X”)
  - We want to store X in data *when we’re ready to!*
- *Clock (Clk)*: Indicates *when* we want to change the data

D-Latch

- Start with SR Latch

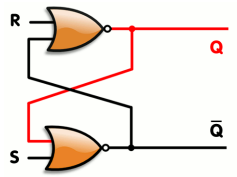

- Describe Desired Behavior (of output, Q)

CLOCK	DATA	Q
0	0	(Unchanged)
0	1	(Unchanged)
1	0	0
1	1	1

D-Latch

- Start with SR Latch

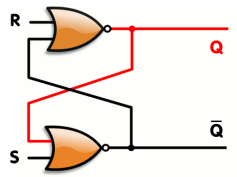

- Describe Desired Behavior (of output, Q)

CLOCK	DATA	Q
0	0	
0	1	
1	0	0
1	1	1

D-Latch

- Start with SR Latch

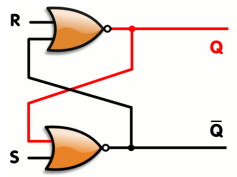

- Describe Desired Behavior (of output, Q)

CLOCK	DATA	Q
0	0	
0	1	
1	0	RESET
1	1	SET

D-Latch

- Start with SR Latch

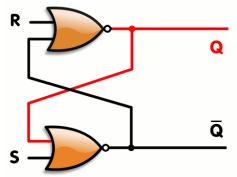

- Describe Desired Behavior (of output, Q)
- Just combinational logic

CLOCK	DATA	Q
0	0	
0	1	
1	0	RESET
1	1	SET

D-Latch

- Start with SR Latch

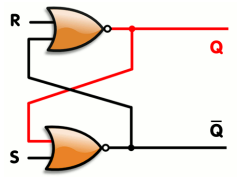

- Describe Desired Behavior (of output, Q)
- Just combinational logic
- Reset = Clock * /Data
  Set = Clock * Data

CLOCK	DATA	Q
0	0	
0	1	
1	0	RESET
1	1	SET

Updates: D-Latch

D-Latch

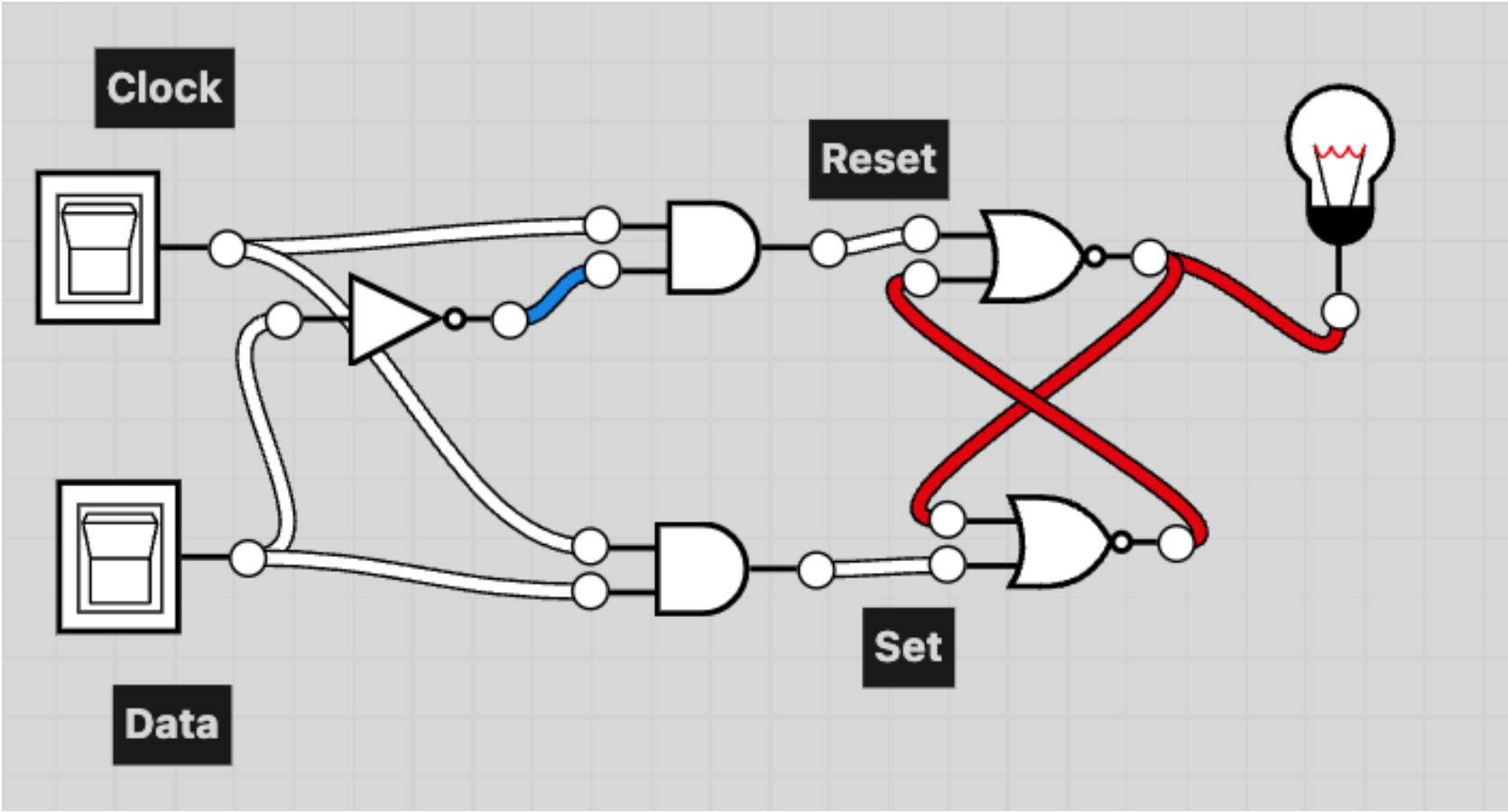

D-Latch

- “Latches on” to last data value when clock goes low
  - Is sensitive to the *level* of the clock
  - Is “transparent” when the clock is high

Advanced Story Time: Latches+

Goal: Store Data

- D-Latch is *still* a bit *inconvenient*
  - We'd like something like a (simple) camera
  - The instant shutter is "pressed" we capture data *at that exact instant* (no transparent phase)

Flip-Flop

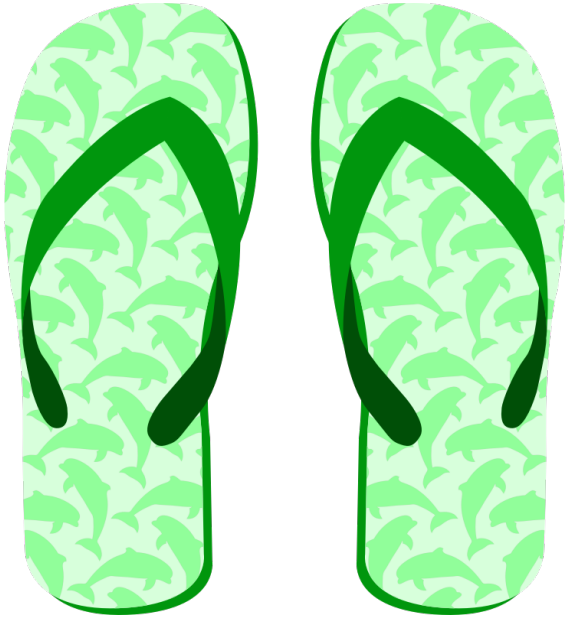

https://openclipart.org/detail/288726/flip-flops-4

D Flip-Flop

- Two D-Latches with clocks in opposite states (via an inverter)
  - First stage: Transparent when clock is Low
  - Second stage: Transparent when clock is High
  - Effect: Capture D at precise instant clock goes from low to high
    - I.e. the clock EDGE
    - Edge triggered. Specifically, Rising Edge Triggered

Signal Edges

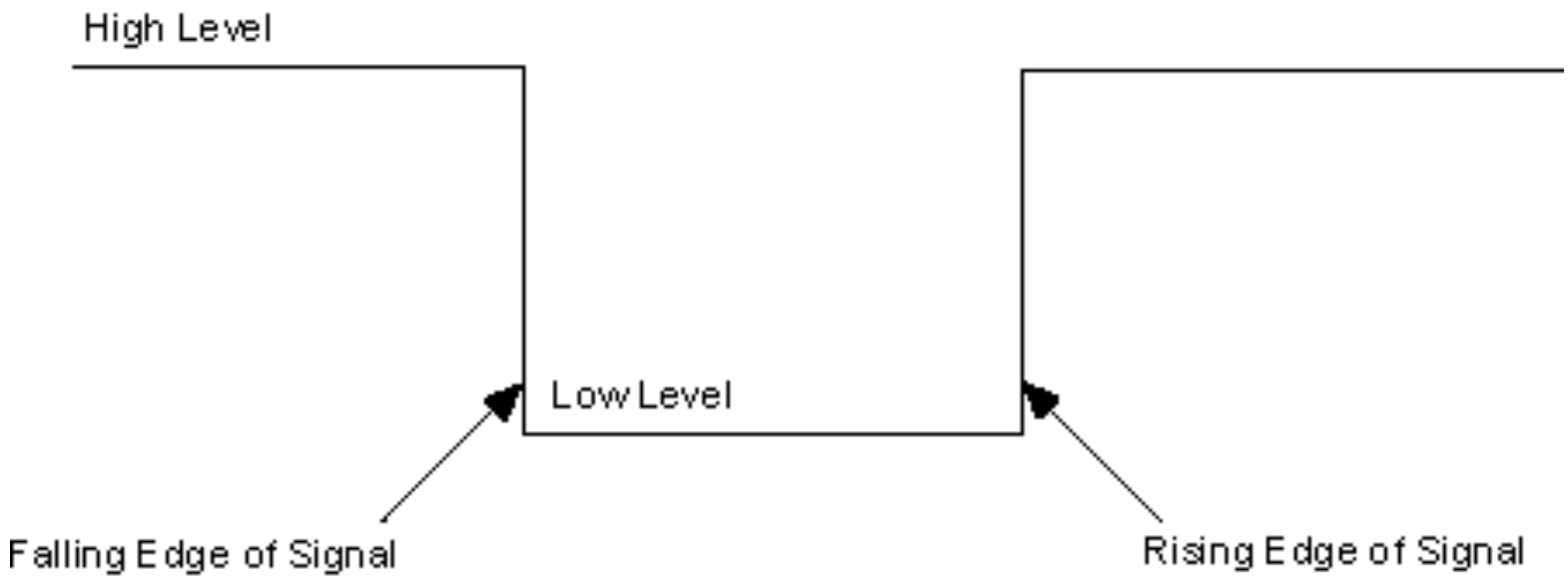

https://www.ni.com/docs/en-US/bundle/ni-hsdio/page/hsdio/fedge_trigger.html

Updates: D-Flip-Flop

“Enable”

- We may want to have two things control timing: the clock and an enable
  - Ex: X[0] = 1 (in a program) . We only want to modify X *when that line runs.*

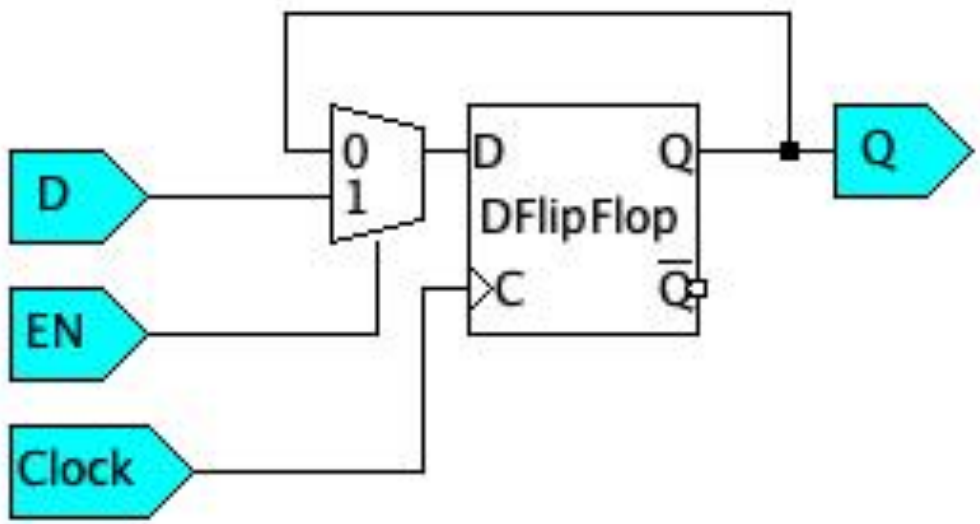

Chapter 3: Sequential & Synchronous Logic

- Need to know sequence of inputs
  - Can’t be represented with a *simple* table of just inputs and outputs (Possibly a complex table that includes some representation of history of inputs and outputs)
- Text: “Some sequential circuits are just plain kooky”

*Synchronous** Sequential Circuits

- Are *synchronized* by a common clock
- Uses registers (D Flip Flops)
- Mix of registers and combinational logic
- Cycles in circuit include at least one register
- Goal: Impose predictable behavior!

* eliminates the “kooky”

*Synchronous** Sequential Circuits

- The Adder loop — without synchronization
  Hardware for:

```
sum = 0
  for i=0..length(A)
     sum = sum + A[i]
```

- And revisited

* eliminates the “kooky”

Finite State Machines

- State: A condition of being
- Finite: Er. Finite
  - Real machine has real-world limitations
  - $k \times$ D-latches
    - k D-Latches means $\leq 2^k$ states (finite)

FSM Applications

- Things with modes or sequences of steps. Examples:
  - Dish Washing Machine (fill/soap, rinse, dry)
  - Stop lights & Traffic control: Green, Yellow, Red
  - Locks: Locked & unlocked
  - Computer programs: Playing game vs. on menu
  - Elevator controls (state = floor)
  - ...

Book Example Variation: Stop Light

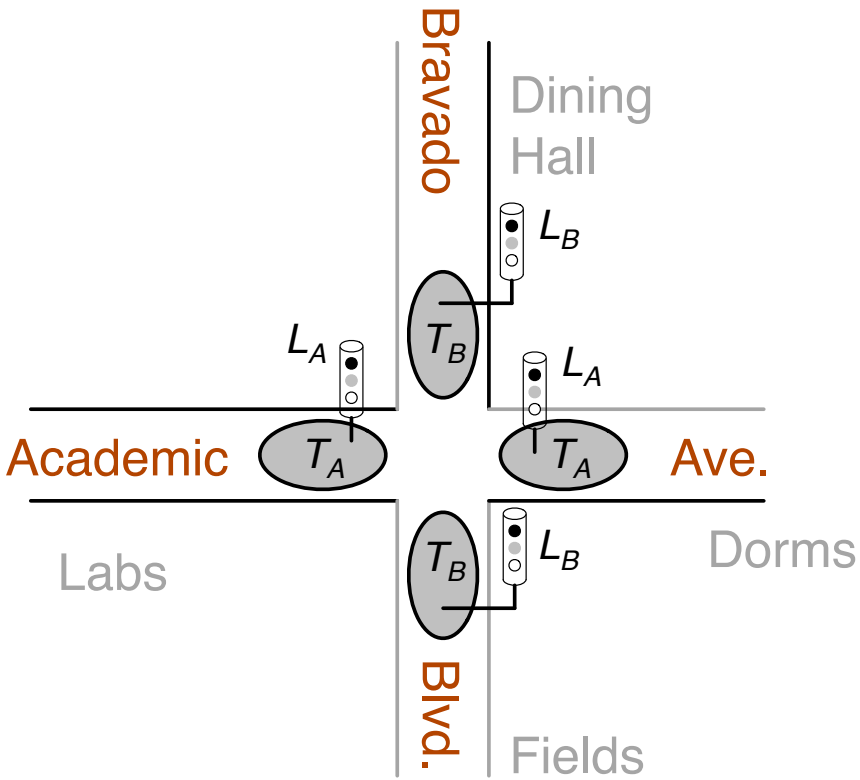

FSM: Moore Machine Structure

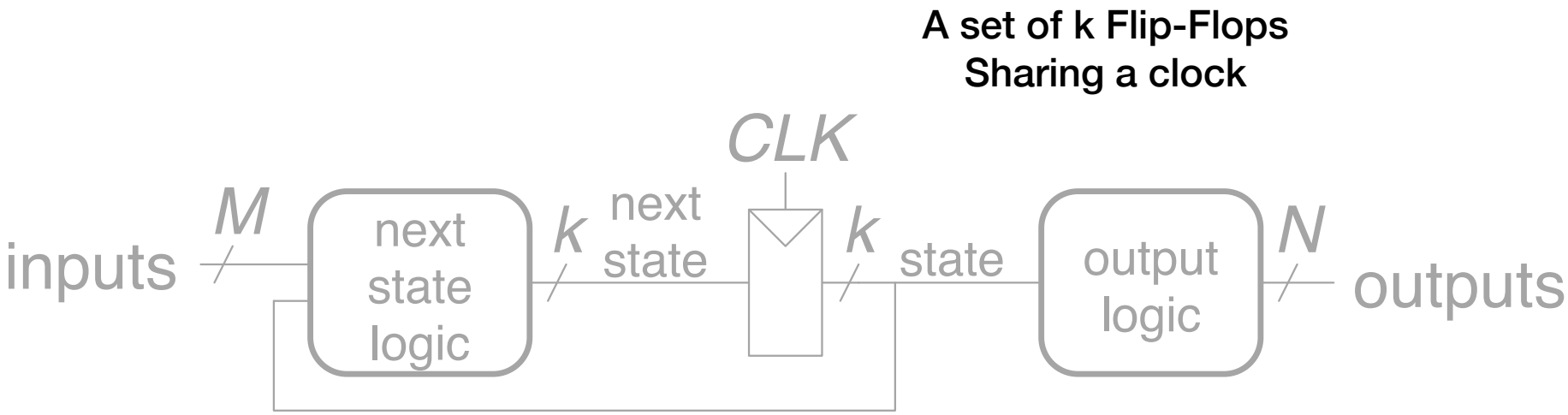

FSM: Moore Machine Structure

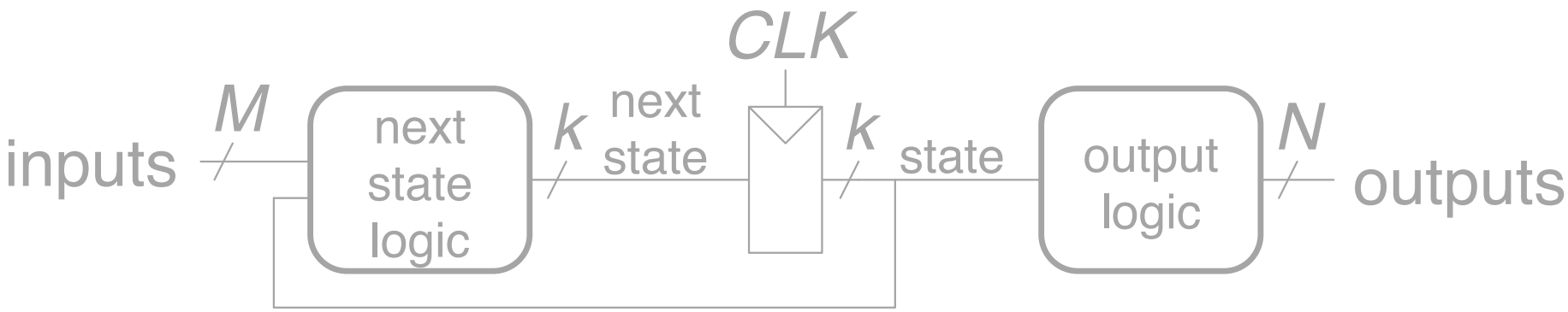

FSM: Mealy Machine

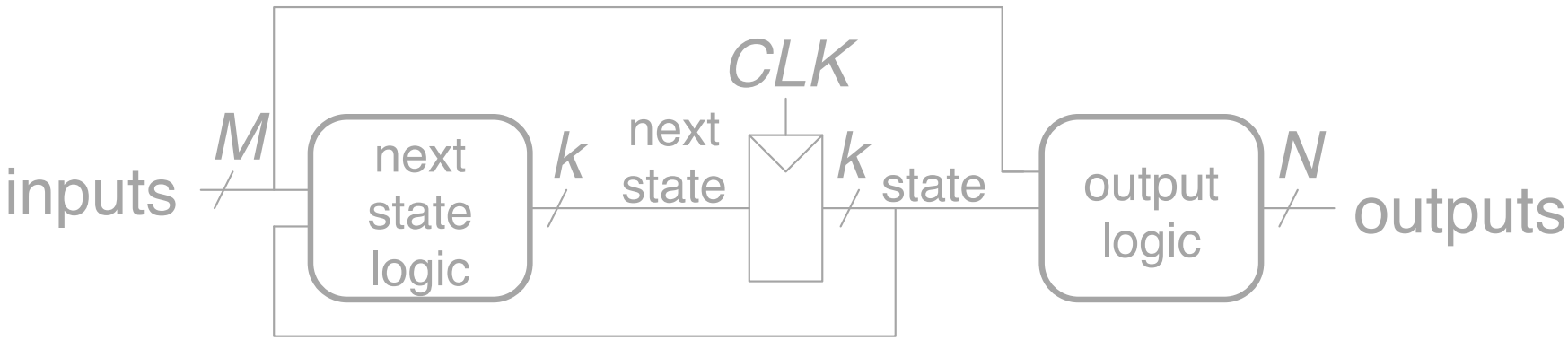

Problem Background

- Clock is 5s: minimum time in a state
- Need to describe behavior over time
- State diagram forms
  - FSM Designer: https://wilsonem.github.io/fsm/
- Example: Variation on textbook;
  Different output signals and “one hot” encoding (Completed)

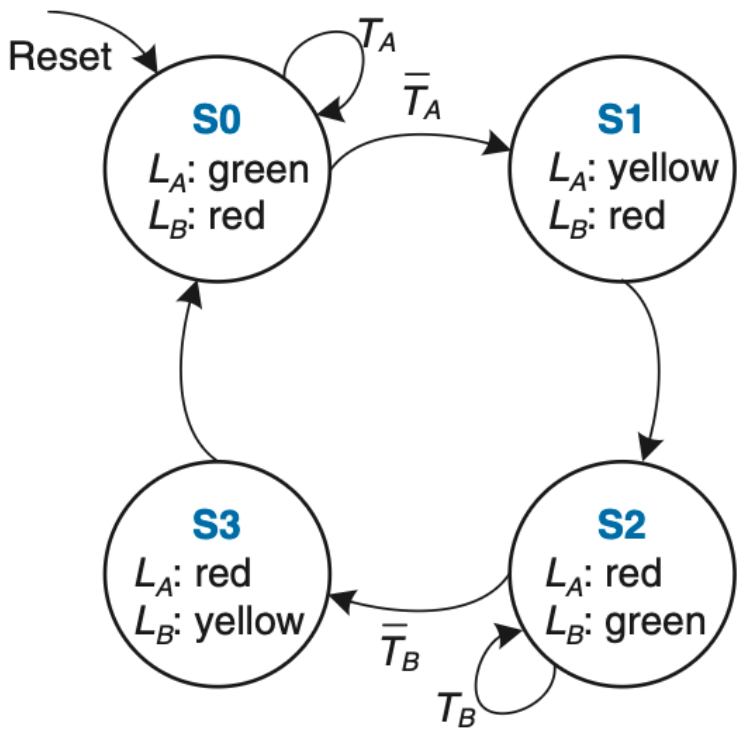
Reset
T_A
$\overline{T}_A$
S0
L_A: green
L_B: red
S1
L_A: yellow
L_B: red
S2
L_A: red
L_B: green
S3
L_A: red
L_B: yellow
$\overline{T}_B$
T_B

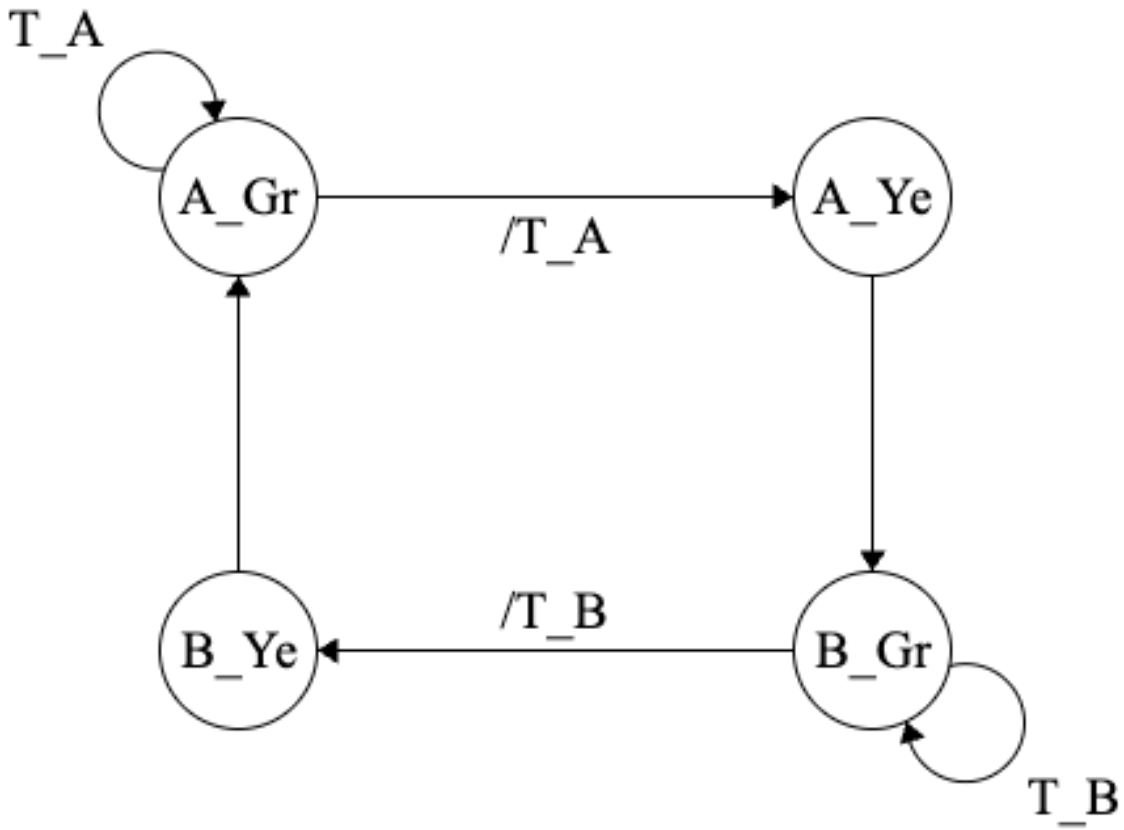
T_A
A_Gr
/T_A
A_Ye
B_Ye
/T_B
B_Gr
T_B

Partial JLS Implementation

Questions

- [State Machine Encoding Choices?]
  Memory vs. Logic: They can impact complexity of combinational logic.
  (Typically One-hot: more memory, but simpler logic))

- [FSMs? Mealy? Moore?]: More (Moore?) next time

- [I don't get/understand Latches/Edges/Levels/Flip-Flops/etc.]

- [Which memory things are important]: (Rising) Edge Triggered D-latch.
  (Most others were just part of the journey to it)

Questions

- [What about async stuff / parallel? Does it matter? Where is it used?]
  - Yes, matters. Is often critical in high performance systems (real time computations, handling volumes of streaming data, etc.)
- Will we make FSMs? Yep.
- Are FSMs part of modern computers? Yes —they often handle the control of CPU operations. We'll see this later.
- Is this "clock" related to the computer clock? How does it relate to computer performance? It's the same basic idea. Much of a computer is controlled by a synchronous machine. The clock speed is based on propagation delay and dictates the speed of computations.

Next Time

- Studio